THE DUNSLEY-HIGHLANDER-10 MULTI-FUEL STOVE

MEETS THE REQUIREMENTS OF THE RELEVANT BRITISH STANDARDS FOR THE WHOLE OF THE UK

FREESTANDING ROOMHEATER
FITTED WITH MULTI-FUEL RIDDLING GRATE

INSTALLATION AND OPERATING INSTRUCTIONS

All measurements of appliances in these instructions are approximate

ALSO AVAILABLE HIGHLANDER-10 WITH ATTACHED LOG STORE, SEE PAGE 10.

LEAVE THESE INSTRUCTIONS WITH THE HOUSEHOLDER

THIS APPLIANCE MUST BE INSTALLED AND SERVICED ONLY BY COMPETENT AND QUALIFIED SOLID-FUEL HEATING ENGINEERS
NEITHER THE MANUFACTURER NOR THIER DISTRIBUTORS WILL TAKE ANY RESPONSIBILITY WHATSOEVER FOR AN APPLIANCE NOT SO INSTALLED AND SERVICED.

Manufactured by: Dunsley Heat Ltd, Bridge Mills, Holmfirth, Yorkshire, England

FOR **EXPERT** ADVICE ON FUELS, INSTALLATION & CHIMNEYS CONTACT:

Solid Fuel Association, 7 Swanwick Court, Alfreton, Derbyshire DE55 7AS Tel: 01773-835400

REF HIGH10 DB012 08-08-13

INSTALLATION INSTRUCTIONS

The Highlander Multi-Fuel Stove is built to the highest standard, using best quality materials and dedicated manufacturing methods, to give you a stove with superb clean burning, for efficient operation, together with pre-heated air wash which ensures a clean view of the fire with maximum efficiency for all fuels used.

The serial number of this stove will be found on the aluminium label which is positioned on the right side, when you are facing the front of the stove.

The Highlander has been approved by HETAS LTD under the approval scheme, being safe and fit for its designed purpose.

STOVE GROSS WEIGHT - 105kg

HIGHLANDER-10
Metallic black with top flue outlet in position.
Easily changed to rear flue outlet see page 9.

TECHNICAL SPECIFICATION

Fuel	Wood logs	Ancit (Smokless fuel)
Nominal heat output, kW	10.0	9.8
Nominated refuel period, h	1	1
Efficiency, %	74.6	77.6
Mean CO emission (at 13% 0_2)	0.35	0.37
Mean flue gas temperature. °C	368	325
Flue gas mass flow, g/s	7.1	5.9

The Highlander has been assessed as an intermittent appliance.

DETACHED PARTS SUPPLIED WITH THE HIGHLANDER 10

1 Operating Tool, 1 Hooked poker, 1 Ash Shovel

1 Installation, Servicing and Users Instructions.

ACCESSORIES AVAILABLE ON REQUEST

1 Multi-Fuel Ash Container - Part No. 01414
1 Fuel Carrier - Part No. 01429

Guarantee - The Highlander Stove when installed and used correctly will give you many years of efficient service. Dunsley guarantees the Highlander stove for a period of 3 years from the original date of purchase against all manufacturing faults. This includes delivery of parts, but does not include any labour involved in removing or replacing the parts or any costs involved with refitting the stove or fire surround and hearth. This guarantee does not apply to items which would be subject to fair wear and tear i.e. all Grate bars, Shaker Bar, Fuel Retainer Bar, Door Rope, Door Glass, Gaskets, Fire Bricks and Throat Brick. Use of parts other than those supplied by Dunsley Heat Ltd, or overfiring of the stove will invalidate the guarantee. This gurantee in no way diminishes the buyers statutory or other legal rights.
Dunsley has been designing and manufacturing solid fuel heating equipment for over 60 years.

PLEASE READ THESE INSTRUCTIONS CAREFULLY - THEY CONTAIN ESSENTIAL INFORMATION

BEFORE YOU BEGIN... THIS APPLIANCE MUST NOT BE MODIFIED IN ANY WAY

CO Alarms:- Building regulations require that when ever a new or replacement fixed solid fuel or wood/biomass appliance is installed in a dwelling a carbon monoxide alarm must be fitted in the same room as the appliance. Further guidance on the installation of the carbon monoxide alarm is available in BS EN50292:2002 and from the alarm manufacturer's instructions. Provision of an alarm must not be considered a substitute for either installing the appliance correctly or ensuring regular servicing and maintenance of the appliance and chimney system.

Warning: The installer has a responsibilty under the healthand safety at work legislation to provide for the safety of person(s) carrying out this installation and to provide adequate protection. Note that the fire cement is caustic (wash thoroughly after use), and be aware of the possibility of disturbing asbestos in older installations. No component on this appliance in manufactured from asbestos or asbestos related products.

This leaflet gives a guide to installation, but in no way absolves the installer from responsibility to conform to British Standards in particular, BS8303-1986, ('Code of Practice for Installation of Domestic Heating and Cooking Appliances Burning Solid Mineral Fuel') and local and nationalbuilding regulations, building standards Scotland and Local Authority bye laws. Or the rules in force in the country where the appliance is to be installed. Failure to install appliances correctly could lead to prosecution. All local regulations including those referring to national and european standards need to be complied with when installing the appliance. Carbon Monoxide alarms should be fitted near to solid fuel appliances. **Please note** that it is a legal requirement under England and Wales Building Regulations that the installation of the stove is either carried out under Local Authority Building Control approval or is installed by a competant person registered with a Government approved competant persons scheme. HETAS Ltd operate such a scheme and a listing of their Registered Competant Persons can be found on their website at www.hetas.co.uk Remember: the chimney is not simply a duct to carry gases away, it is an integral part of the appliance. No stove will work correctly unless the chimney is sound.
On first initial lighting of the stove condensation could occur causing discolouration of the glass, the condensation could turn to drops of water, this would particularly apply if the chimney was new or had not been used for a long time. This is a natural thing and should not be cause for concern. The same would apply if wet fuel is burnt, particularly wet wood.
Also note: The Highlander Stove is spray painted with a special heat resistant stove enamel paint. As it heats up for the first time the paint will commence to cure and the resin in the paint will give off a smell for 2 or 3 hours, this smell is not harmful. It is best to run the stove at low to medium temperature for the first 4 to 5 hours.

CHIMNEYS SHOULD

- Terminate above the ridge and in any case at least 1m above the roof level.
- Be at least 4.5m high measured vertical from the top of the stove. Horizontal connecting flue pipe to be no more than 150mm long
- Have a minimum internal cross section not less than 150mm diameter round.
- Be free of any cracks.
- Have no bends sharper than 45 degrees, and be free from obstructions.
- Make complete provision for sweeping access.
- Be swept by a qualified chimney sweep.
- Be connected to this one appliance only.
- Older chimneys may have been poorly built or have developed cracks. If you suspect this, seek expert advice.
- This appliance is not suitable for a shared flue system.

FLEXIBLE FLUE LINERS - A twin wall flexible flue liner of 150mm diameter can be used as required. The twin walled flue liner must be approved as suitable for use on solid fuel appliances. Installation and servicing must be in accordance with the manufacturers instructions and building regulations 2010. J in particular sections 1 and 2.
Suitable for approved smokless fuels and properly dry seasoned wood.

NEW CHIMNEYS - New masonry chimneys must conform to building regulations BSEN 15287-1:2007 design, installation and commissioning of chimneys. Factory made chimneys (twin wall insulated) should conform to BS 1856-1-2009, and be installed in accordance with the manufacturers instructions.
The single skin 150mm diameter fluepipe should be kept as short as practical and should not be used as a complete chimney, it should join the insulated chimney before passing through any ceiling, roof space or wall, this is designed to give a safe warm flue system. All parts must be accessible for cleaning.

THATCHED PROPERTIES - you need to obtain house insurance agreement to do any work involving work on chimneys. Clear guidance for installers is available in buildings regulations.

EXTRACTOR FANS

An extractor fan must not be fitted in the same room as the appliance.

HEARTH AND APPLIANCE SETTING

The stove must be installed on a level solid hearth. Constructed of non combustable material, and extend 225mm in front of the stove, and 150mm to each side. There must be at least 75mm air gap between the back and the side's of the stove to give sufficient air circulation and 125mm between top of stove and lintel. Hearths should be constructed of a suitable robust material and appropriate dimensions. Refer to building regulations 2010 document J.
For your information on over run test the maximum temperature of the hearth in the centre directly underneath the Highlander 10 measured 110°C with ambient temperature of 21°C.

COMBUSTIBLE MATERIALS

The safe distance from combustible material to the rear and side of the appliance should be 575mm side and 1000mm from the rear. In addition the flue pipe must be a minimum of at least 3 times the flue pipe diameter from combustible material (normally 460mm) unless the combustible material is insulated in accordance with the building regulations in which case the distance can be reduced to 1.5 times the flue pipe diameter.
Care should be taken to keep soft furnishings and moveable items of furniture well clear of the stove.

AIR SUPPLY

For closed appliances without any draught stabilizer fitted, the air requirement is 550mm² per kW of rated output above 5kW

THE DUNSLEY HIGHLANDER MULTI-FUEL STOVE COMPLIES WITH THE FOLLOWING STANDARDS

ASPECT	STANDARDS USED	
	SOLID MINERAL FUELS	WOOD FUELS
Constructional and Dimensional Requirements	EN.13240:2001	EN.13240:2001

FITTING THE STOVE

TWO POSSIBLE INSTALLATION ARRANGEMENTS

FIG. 1.

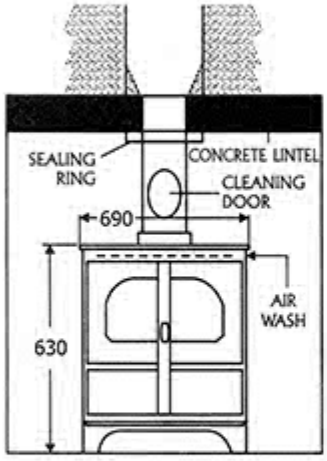

FIG. 2.

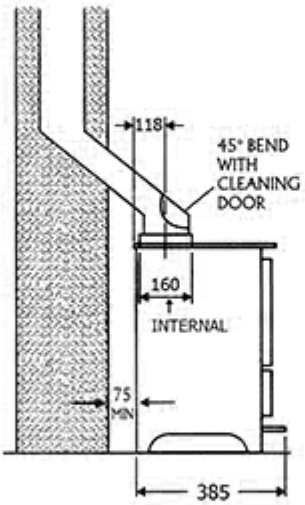

If it is intended to fit the canopy onto the stove, the overall height of the stove will increase by 150mm. See page 8. FIG 11.

For rear flue outlet, see page 9.

Before positioning the stove please make sure both Gaskets supplied are fitted to the top and rear flue outlets.

Place the stove in position on the hearth, ensure the stove is set on the level hearth in the required position. Levelling adjusting bolts are fitted on projecting brackets at the bottom rear of the stove and in the base of the front legs, with the bolt heads facing down to give a firm base, these adjusters may be used for final levelling on an uneven hearth. One 8mm hole is also provided in each rear bracket to fix the stove to the hearth as required.

Connect the appliance to the chimney using a length of 150mm diameter fluepipe, sealed to the stove and the chimney using glass fibre cord and fire cement.

The fluepipe connection can be vertical or have a single 45 degree bend. It may be fitted with a cleaning door for cleaning the chimney as shown at FIG. 1 and 2.

The flue pipe can also be reached through the stove. To do this, ensure the fire is out and the stove cold, open the main door, remove the fuel retainer bar, remove the throat plate. The chimney can then be swept through the main door. After sweeping, replace the throat plate. See servicing instructions and FIG 6. page 6. Replace fuel retainer bar.

Possible methods of making the flue connection are shown, (see Fig 1 and Fig 2). For rear flue outlet see page 9. FIG 12. and 13.

Whatever method is used it is imperative that:

The complete flue from the stove itself to the top of the chimney terminal is sound. Even small cracks or gaps may cause smoking or poor performance.

The complete flue should be smooth internally without any voids in which gases can swirl or be cooled down, nor any ledges on which soot may accumulate.

It must be possible to clean the entire length of flue. In some installations it may be necessary to fit a cleaning door in the chimney.

If from experience it is decided there is excessive "draw" in the chimney and a draught stabilizer is fitted to the flue pipe or chimney in the same room as the appliance extra permanent air entry opening must be provided, see building regulations 2010 Document J.

With the chimney warm a draw of between 0.15 and 0.3 mbar (0.06 to 0.12 ins W.G) is recommended.

INSTALLER'S DUTIES

Check that all parts are correctly fitted, visibly check that seals between components are in place. Light the fire, see operating instructions. Check that the flue functions correctly and all products of combustion are vented to the atmosphere through the chimney terminal.

Demonstrate use of the appliance, and accessories to the user, and hand over the instructions.

Offer to supply everything necessary for proper operation: Fuel, fuel store, fuel carrier, ash carrier etc.

Remind the householder of the need for regular chimney sweeping and draw their attention to the 'Warnings' in this document.

WARNING NOTE
Properly installed and operated this appliance will not emit fumes into the dwelling. Occasional fumes from de-ashing re-fuelling may occur. However, persistent fume emission is potentially dangerous and must not be tolerated. If fume emission does persist, then the following immediate action should be taken:
a: Open doors and windows to ventilate room and then leave the premises.
b: Let the fire out.
c: Check for flue or chimney blockage and clean if required.
d: Do not attempt to re-light the fire until the cause of the fume emission has been identified and corrected. If necessary seek expert advice.

CO Alarm - Your installer should have fitted a CO alarm in the same room as the appliance. If the alarm sounds unexpectedly, follow the instructions under "Warning Note" above.

OPERATING INSTRUCTIONS

PLEASE READ THESE INSTRUCTIONS CAREFULLY - THEY CONTAIN ESSENTIAL INFORMATION

GETTING READY TO USE YOUR HIGHLANDER STOVE

When the installer has completed the installation go over these instructions with the installer before lighting the stove, also check the flue system. An extractor fan must not be fitted in the same room as the appliance. It is essential that the fire has adequate air supply for combustions and ventilation. Apertures provided for this purpose shall not be restricted. Where the chimney is believed to have served an open fire installation it is possible that the higher flue gas temperature from a closed appliance may loosen deposits that were previously firmly adhered, with the consequent risk of flue blockage. It is therefore recommended that the chimney be swept a second time within a month of regular use after installation. Have the chimney swept at least once a year. Take care to clean the chimney flue connections and flueways prior to lighting up after a prolonged shut down period. A fireguard conforming to BS8423:2002 should always be used whenever children, the old and/or infirm are present, as the exterior surface of the stove is a working heating surface and can get very hot. Do not use an aerosol spray near the appliance. Do not operate the stove with the door open, except when lighting, re-fuelling or clearing ash, then operate according to the instructions, use the operating tool to open and close the door. Turn the knob anti-clockwise to open, clockwise to close.

LIGHTING

The Highlander stove is fitted with a multi-fuel riddling grate which enables both solid fuels and wood to be burnt, see FIG. 3 Page 4. De-ash the firebed, grate bars open, fully open the primary air inlet, bottom control. Half open the top air wash control, see FIG.4 Page 6. Place two or three fire lighters, or paper on the grate with plenty of small sticks of dry wood on top. Ensure you have a good fire base, fuel with more wood if required, especially if the fuel you are to use is a hard coke or oval, lightly cover with the fuel you wish to use, light the fire lighters or paper, close and latch the stove door. When the fuel is burning well fully fuel the fire, adjust the air controls as required. **DO NOT OVER FIRE.** Set the grate to the position to suit the fuel you are to burn, see FIG .3 Page 4.

On first time lighting the stove will emit a smell and possibly a smokey haze which is not harmful but could set off any nearby fire alarms. To begin with, it is best to run the stove at a low temperature for four to five hours until the stove paint has cured.

CONTROL

The rate of burning and the heat output is controlled by the amount of air entering the firebox via the primary air control which is situated below the glass in the door and the secondary air wash situated at the top of the door, see FIG. 4. Page 6. both are controlled by sliding action, right for ON, left for OFF.

To adjust the burning rate, with the fire burning well you will find when burning wood that the primary air control can be closed or nearly closed and the burning rate controlled by the secondary air wash control.

When burning fuels other than wood you may find that the primary air control requires opening to a greater degree particularly for a short while after re-fuelling.

If the fire has burnt very low, burning either wood or other fuels open up the primary air control to revive the fire for 2-3 minutes, use small pieces of wood if required.

The secondary air wash is the one that washes the glass to keep it clean, when closed for long burning periods the glass may discolour but should clear when the air wash is opened up again. The most suitable settings will quickly be found from experience. Move the air control slowly to find the suitable position 3mm open min setting. When the secondary air wash is in the closed position the air control is still slightly open to allow a bleed of air into the stove to assist in maintaining the stove in good condition, when not in use.

DE-ASHING, and SETTING THE GRATE

The Highlander Multi-Fuel Stove is fitted with a multi-fuel riddling grate which has two functions:

It adjusts how much space there is between the firebars, making them suitable for either wood or for other fuels. It agitates the firebed to remove ash. See FIG. 3.

To de-ash the fire- the door must be closed. Locate the operating tool in the boss on the right-hand side of the stove and agitate it up and down to dump the ash into the ashpit ready for removal.

To remove ash- when the stove is hot gloves should be worn. The ashpan should be emptied regularly before it becomes too full. Never allow ash to build up and touch the underside of the grate as this will seriously damage the grate bars.

The Highlander-10 has a generous ash capacity below the grate bars, but care must still be taken.

Always allow the ash to go cold before disposing of it in plastic dustbins or bags. Dunsley Heat can supply special ash carriers to make it easier and cleaner to carry ash through the house and allow the ash to cool before putting it into plastic containers. The ash pan is the shovel type and can be kept in or out of the stove.

FIG. 3.

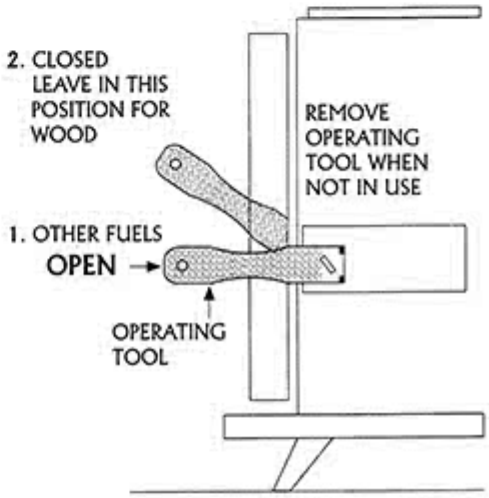

RE-FUELLING:

To re-fuel, de-ash as required, open door slowly, the firebox should be well filled but do not overfill. Do not allow any fuel to lodge between the glass and front bars, or touch the glass.

SETTING THE GRATE POSITION: Use the operating tool to move the grate bars to the appropriate position for the fuel you are using, please refer to FIG.3. above.

GRATE BARS AS STANDARD: The grate bars on the Dunsley Highlander Multi-Fuel Stove are manufactured from cast iron. To get the best life out of the grate never allow the ash to build up in the ash compartment and touch the underside of the grate as this will reduce the life of the grate bars.

As other stove manufacturers Dunsley do not recommend Petroleum Coke, Anthracite, or Welsh Dry Steam Coal to be burnt on Cast Iron grates.

Chrome Iron Grates are available on request, these grates have a much longer life than cast iron grates and are well worth the extra cost.

STOVE NOT IN USE

If the stove is to be left unused for a prolonged period of time then it should be given a thorough clean to remove ash and unburned fuel residues. To enable a good flow of air through the appliance to reduce condensation and subsequent damage, leave the air controls fully open.

FUELS BURNT IN SMOKE CONTROL AREAS

Dunsley recommend the following authorised fuels:
Blazebrite, Phurnacite, Phurnacite nuts, Ancit, Taybrite, Sunbrite Doubles, Easycoke, Extracite, Purheat, Supercoke, Maxibrite, Newflame, Supacite, Thermac, Anthracite Large Nuts, approximately not less than 60mm cubes.

Do not use small size fuels i.e. Beans, Peas and Grains etc

PETROLEUM COKE and **HOUSE COAL** are not suitable for use.

PLEASE NOTE:

All fuels must be kept dry for best combustion results, also to help prevent discolouration on the glass of the fire door. Avoid fuel which contains much dust, or small particles.

WOOD:

The Highlander stove can take logs up to 550mm (22") long 100mm (4") diameter, and burn any type of wood as long as it is dry. By dry we mean that it contains less than 25% moisture. When first cut down, wood cells are full of water and will need drying for at least a year (outside under a shelter or tarpaulin will do) ensure there is air access to assist. Wet or 'green' wood wastes heat in making steam, and produces flammable acidic tars which will discolour the glass, cling to and can damage your chimney or stove. Nails in wood could cause grate bars to jam as the nails fall from the wood.

Wood burns best on a layer of its own ash with the grate bars half open, see page 4. FIG 3, therefor when you riddle the grate leave a layer of ash about 13mm thick on top of the grate.

RE-FUELLING:

When re-fuelling burn on high output for 2-3 minutes to establish combustion before turning down to low fire settings.

LOW BURNING:

The Highlander will burn for longer periods by allowing the fire to burn down to a low hot firebed, removing the ash as required, filling level and evenly distributing to the top of the coal retaining bar and setting the air controls to a lower setting. Hard fuels like Ancit or hard coke will burn the longest. Trials may be necessary to find the best settings for the fuel being used. The misuse of the air controls can cause excess smoke, use controls as directed; page 4 'controls'

THE DUNSLEY HIGHLANDER IS NOT DESIGNED TO BE OPERATED WITH THE FIRE DOOR OPEN. THE DOOR MUST BE CLOSED WHEN THE STOVE IS OPERATIVE

ECONOMY Surprisingly, best economy is achieved with the firebox full of fuel and the air control set nearly 'closed', to give a steady glow. The fire will burn much more efficiently than if you re-fuel 'little and often'.

As other stove manufacturers - Dunsley do not recommend Petroleum Coke or Welsh Dry Steam coal.
Chrome grates are available on request, these grates have a much longer life than cast iron grates and are well worth the extra cost.

HOUSEHOLD WASTE AND NONE RECOMMENDED FUELS
Household waste containing plastic or batteries or aerosols must not be burnt. Remember that these items can explode, do not attempt to burn them. Also it is not recommended to burn petroleum coke, liquid fuels or treating the stove as an incinerator.

IT IS WISE TO CHECK THE FOLLOWING FROM TIME-TO-TIME:

THE STOVE MUST BE COLD.

CONDITION OF FIREBRICKS: Minor cracks in firebricks are quite normal due to the very high temperatures developed. Firebricks need only be replaced if part of the brick has broken away.

CONDITION OF FIRE BARS: The firebars (unless specially ordered in chrome iron) are made from cast iron for strength and durability they will last a long time provided the ash is not allowed to build up in the ash compartment and touch the underside of the bars. Damaged bars should be promptly replaced.

TIGHTNESS OF DOOR SEALS: It is essential that the door seals correctly against the stove body. After a period of use the glass-fibre rope seal may become compressed or damaged. The seal should be closely examined and replaced as required. Check the setting of the door to ensure it is fitting correctly with the seal tight against the body of the stove.

The hinges can be adjusted by the two locking nuts which are situated on the hinges one each side of the body of the stove.

The nut on the inside of the top hinge can be reached by a 13mm box spanner through the hole provided at the rear of the air wash guide.

The door catches can be tightened by moving a washer located on the back of the door catch, to the front of the door catch (between the handle and the door). To slacken reverse the procedure.

Regarding the door handle; When opening and closing the door use the tool provided for the door handle.

CLEANING THE STOVE BODY The decorative parts can be cleaned with a damp cloth when the fire is cool. Do not use abrasives or metal polish, and never use aerosols near to the burning fire. Should repainting become necessary, the stove fire should be out and the stove cold. High temperature paints are available from Dunsleyheat.

CLEANING THE LARGE AIR WASHED WINDOW

The window of your Highlander Stove is made, not from glass, but from a tough transparent ceramic. With most fuels, it will remain fairly clean. An occasional wipe with a damp lint free cloth when the glass is cold is all that may be needed. Continual use at low Outputs, if wet may cause sticky tars to stain the glass.
You can help prevent this by:

- Placing the firelighter and kindling fuel at the back of the stove when lighting.
- Keeping the Air Wash control half way open until the fire is nicely established.
- Using only dry fuel.
- Severe stains can be removed when the glass is cold using special stove glass cleaning liquid available from solid fuel stove outlets.

The use of wet fuel is not recommended as this can cause a reaction on the inner glass protection coating. This may turn the glass to craze but doesn't effect the safety or working of the stove. But is not covered by Dunsleys guarantee. Also do not use cold water on hot glass as this also can cause crazing.

PROBLEMS? Problems like those listed here are not normally caused by this appliance. They are due to some difficulty with the fireplace, chimney or fuels, so check back through this leaflet carefully.

POOR HEAT OUTPUT? Use only recommended fuels in the correct sizes. Check main flue, check stove flueways, check air intake, check fire bars, check space below fire bars, ensure ash is reasonably clear and not touching the bars.

STOVE TO BE SHUT DOWN for a long period, de-ash and clean the fuel / ash area, leave the air controls open to maintain a flow of air through the stove to avoid condensation or corrosion.

DIFFICULTY IN BURNING FOR EXTENDED PERIODS? If all the fuel has burned away, this is probably because too much air has been reaching it. There are several possible causes:

1. The doors may not have been closed properly.
2. The chimney draught was too high (this can be a problem with any fire) and usually happens when it is very windy.
3. The air slides were not adjusted correctly.
4. Not enough fuel was put on the fire.
5. The sealing rope on the doors or glass may require attention.

If much unburned fuel is left, then a little more air is required, so the air control should be adjusted accordingly. If the problem persists check the sealing of the flue pipe to the appliance and chimney.

FUME EMISSION INTO ROOM A slight fume emission into the room may occur while refuelling, but should not occur during normal running. If fumes occur in normal running **LET THE FIRE OUT AND CHECK THE FOLLOWING:**

1. Is the fluepipe well sealed into the appliance and chimney.
2. Check the flue way and throat plate at the top of the Stove is clear.
3. Check the chimney is clear (If the problem occurs after the fire has not been used for a period the chimney may be blocked by a birds nest or fall of ash and soot).
4. Can enough air enter the room - has the air brick been sealed? Double glazing installed or a fitted carpet closed gaps around the doors and skirting board?
5. Is there a downdraught on the chimney? This could be caused by a nearby tree, hill or high building and if this is suspected we recommend taking advice from a chimney expert.

MAINTENANCE AND SERVICING INSTRUCTIONS

The main flueways and throat plate must be kept clear. The frequency of cleaning will depend on use and the fuels burnt, as a guide we suggest:-

EVERY MONTH - When the fire is out and the stove is cool check on top of the Throat Plate for excessive deposit. The Throat Plate has two holes placed in the front to take the operating tool, this enables you with the use of a torch, to shine through the holes to see above the Throat Plate for any excess soot deposit. To clean the Throat Plate wearing gloves remove the fuel retaining bar, all grate bars and ash pan - lift up left side of Throat Plate as far as possible into the top left side of stove. Drop down the right side of the Throat Plate into the ash pan area and remove by pulling forward the left side of the Throat Plate.
Replace in reverse order, ensure the Throat Plate sits on top of the side bricks with the down bend touching the rear bricks.
See Fig. 6.

When it is required to sweep the main flue follow above procedure.

EVERY YEAR: Have the main flue swept, using a wire centred sweeps brush fitted with a guide wheel. We strongly recommend that you engage a qualified chimney sweep (see the information on the front cover). Any purpose provided ventilation should be checked periodically at least once per year to ensure that it is free from obstruction by a competent engineer.

STOVE WITH GRATE BARS REMOVED

FIG.4

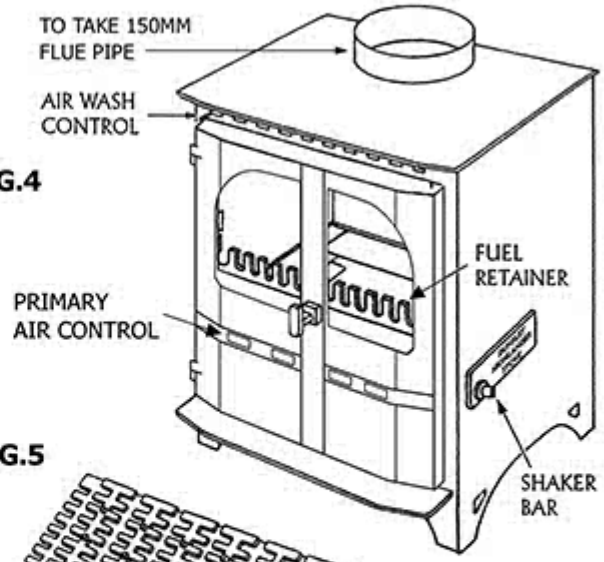

FIG.5

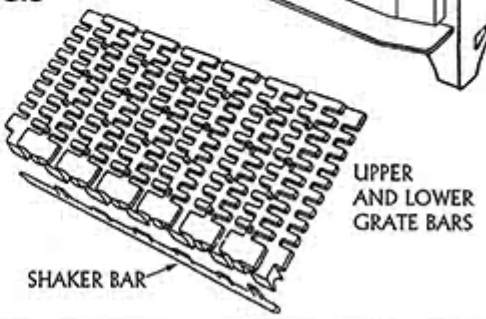

STOVE SIDE VIEW, WITH FIREBRICKS, THROAT PLATE, IN POSITION

FIG.6

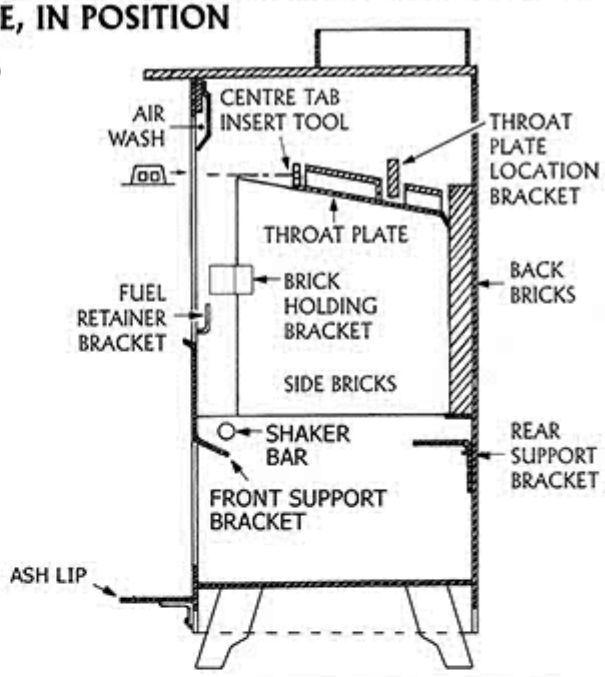

FIG.7

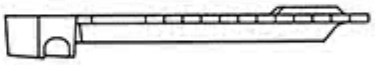

7 OFF

LOWER GRATE BAR, IN FIRST/OUT LAST

FIG.8

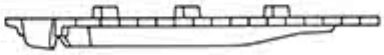

6 OFF

UPPER GRATE BAR, IN SECOND/OUT SECOND

FIG.9

FUEL RETAINER BAR, IN THIRD/OUT FIRST

1. FITTING THE GRATE BARS

The shaker bar is already fitted, it should not normally be removed. (if it is to be removed see Para 3. also FIG. 5. AND 6.)

A. Turn the shaker bar so that the projections are facing upwards, see FIG. 5.

B. Place the 7 lower grate bars in position first, insert the bars with the half round boss facing downwards, see Fig. 7 page 6 to rest on the shaker bar between the projections, with the rear end of the bar resting on the rear support bracket below the firebricks. See FIG. 6.

C. Place the 6 upper grate bars on top and between the 7 lower grate bars, with the recess in the bottom fitting on the projections of the shaker bar, see FIG. 8.

2. FITTING FUEL RETAINER BAR

A. See FIG. 4, 6+9. Note the fuel retainer brackets, one each side of the door opening.

B. See FIG. 4. and 9. fuel retainer bar, take hold with the castle projections uppermost and the sloping skirt facing inwards to the firebox to protect the riddling movement. Slide the retainer bar into the holding brackets.

NOTE- The fuel retainer bar must be taken out first to remove the grate bars.

3. TO REMOVE THE SHAKER BAR

Remove fuel retainer bar, remove all grate bars, remove the name plate at the right side facing by removing the two screws, turn the bar so that the projections face backwards, slide the bar into the key hole slot at the right, push the bar inwards and upwards at the left side, pull out of the key hole slot and remove. Replace in reverse order.

FIREBRICKS - See Fig. 10 below.

The Highlander 10 Stove is supplied with all firebricks fitted. The firebricks should not be removed except to replace broken ones:- To remove firebricks, remove throat plate, lift up at left side facing pushing up to top and lowering the other end to remove. To remove side bricks remove the brick holding brackets one at left and right at the front. The brackets are not fixed by screws, lift up to remove, lightly tap if necessary, the side bricks and rear brick can then be removed. To replace fit rear bricks then side bricks then brackets then throat plate.

FIG.10

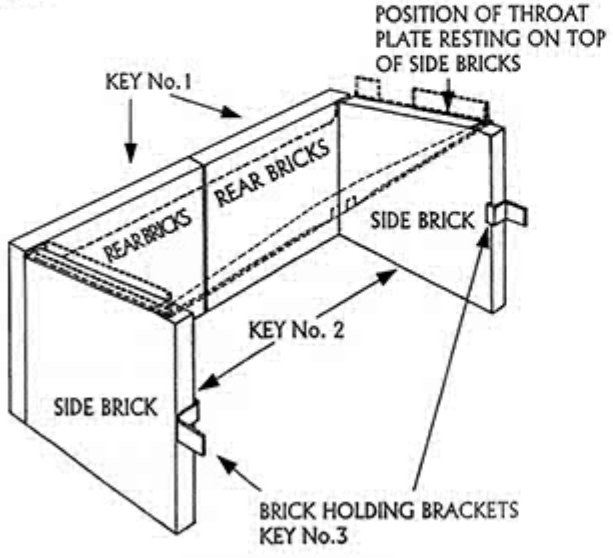

KEY No.	LIST OF SPARE PARTS items marked * not on drawing	No. OFF	DUNSLEY PART No.
1	Back bricks	2	02383
2	Side bricks, interchangeable	2	02101
3	Firebrick holding brackets, interchangeable	2	02007
4	Shaker Bar cast iron	1	02384
5	Lower grate bar cast iron	1	02104
5	Lower grate bar chrome iron	1	02105
6	Upper grate bar cast iron	1	02106
6	Upper grate bar chrome iron	1	02107
7	Fuel retainer bar	1	02352
8	Throat plate	1	02385
9	Hooked poker	1	02016
10	Operating tool	1	02017
11	Door knob assembly, state-silver, black or brass	1	02365
12	Hinge assembly, door	1	02019
14	Ash shovel	1	02354
*	Ceramic glass for door	1	02355
*	Glass retainer tabs with screws	1	02032
*	Fibre seal for glass	1	02356
*	Sealing rope for door	1	02357
*	Sealing rope glue	1	02038
Page.9	Blanking Plate	1	02122
Page.9	Flue Outlet Spigot	1	02123
15	Flue Sealing Gaskets	2	02358
*	Canopy Top Flue Outlet	1	02381
*	Canopy Rear Flue Outlet	1	02382
*	Boiler Stainless steel	1	02380
*	Door left facing	1	02363
*	Door right facing	1	02364

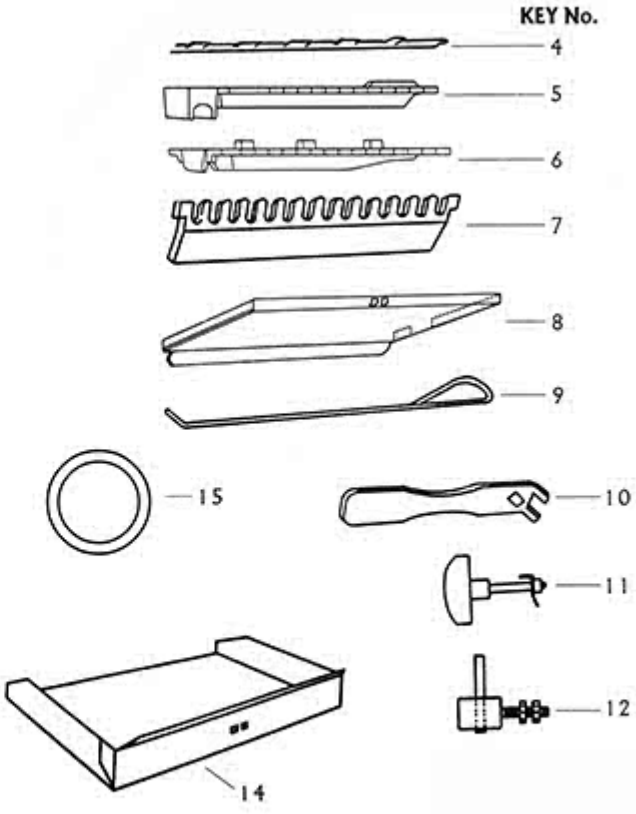

N.B. DRAWINGS NOT TO SCALE

TO REPLACE DOOR GLASS OR FIBRE SEAL

The glass is held in position by four retainer tabs, remove the tabs, ease the glass out at the bottom then remove. Check fibre seal and replace with new as required, check small gaskets on retainer tabs and replace as required.

Replace in reverse order.

If it is required to remove the doors it is not necessary to disturb the door hinge adjustment.

Open the door to 90°.

Lift the door evenly upwards to remove. A few drops of WD40 light oil would be an advantage.

Replace in reverse order.

TO RENEW THE SEALING ROPE ON THE DOOR

Remove old sealing rope, clean metal groove with steel wool or similar, put adhesive Part No. 02038 in bottom of groove and push new sealing rope firmly in position.

AVAILABLE ACCESSORIES FOR THE HIGHLANDER 10 MULTI-FUEL STOVE

ALL MEASUREMENTS IN MILLIMETRES

Multi-Fuel Ash Container Dunsley Part No. 01414

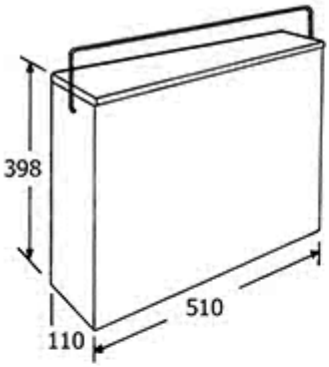

The Highlander ash shovel slides into the ash container to avoid possible spillage of ash when carrying through your residence.

Fuel Carrier Dunsley Part No. 01429

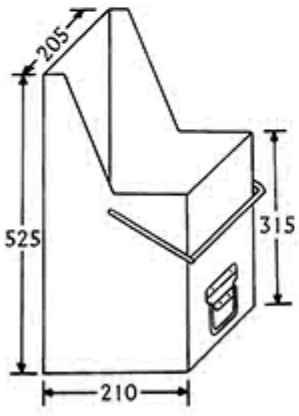

The nose fits easily through the door of the Highlander to re-fuel.

Highlander 10 Canopy Part No. 02381

Optional Extra

FIG.11

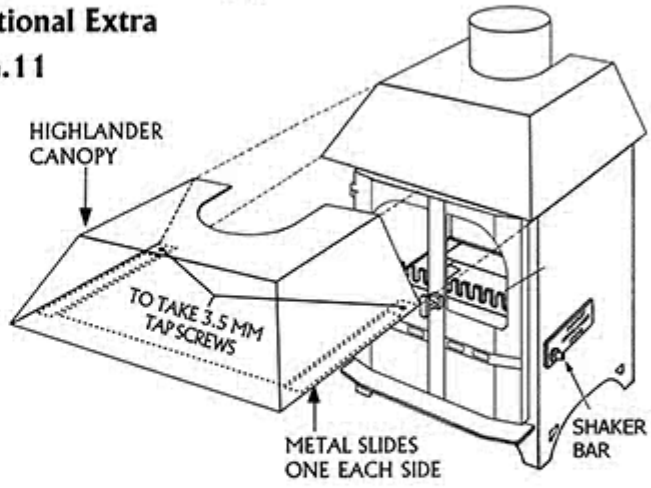

The Canopy is available as an optional extra, it can be fitted or removed at any time. Please note - this would increase the overall height of the stove by 150mm.

The canopy is fitted after the installation of the stove has been completed, the flue system checked with the stove under fire.

To fit the canopy slide the open end onto the top of the stove with the bottom below the stove top and the metal brackets on each side of the inside of the canopy sliding on top of the stove top, push well back to stop. The two holes at the back of the bottom flanges are to take the two 3.5mm x 16mm tap head screws provided. Screw the screws fully in, they come through at the back of the Highlander top and hold the canopy in position, see FIG. 11.

A Canopy is also available without a recess for the flue, if you are using the rear flue outlet. It fits in exactly the same way.
Quote part no. 02382.

DOMESTIC HOT WATER BOILER

is available in stainless steel or steel with an output of approximately 4.5kW on solid fuel only. This can be fitted on site at any time as required.
For further details please contact Dunsley Heat.
Tel: (01484) 682635

CONVERTING TO REAR FLUE OUTLET

The Highlander 10 can be fitted as a top or rear flue outlet. For transport reasons it is supplied with the flue outlet fitted to the top position and the blanking plate fitted to the rear outlet position. They are not permanently fixed and are interchangeable. Remove both, decide which position you intend to use them, using the two flue sealing gaskets supplied fix them in the position required ensuring the joint is sealed with the gasket and the slotted set screws are well tightened.

BLANKING PLATE -
Part no. 02122

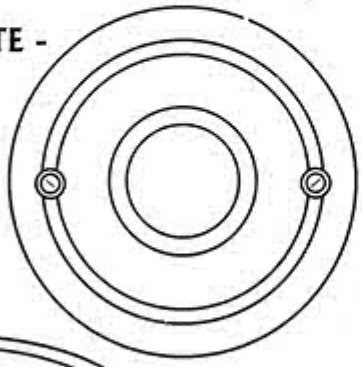

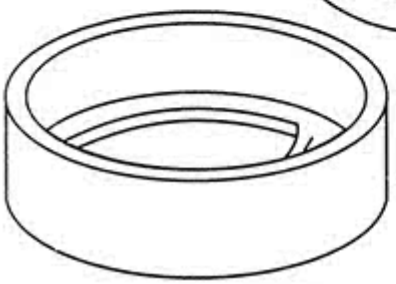

FLUE OUTLET -
Part no. 02123

REAR FLUE OUTLET INSTALLATION

FIG.12

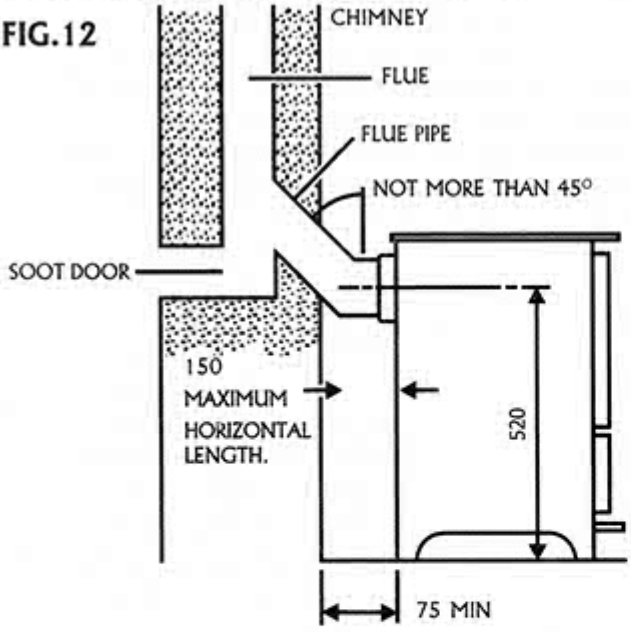

REAR FLUE OUTLET INSTALLATION ALTERNATIVE

FIG.13

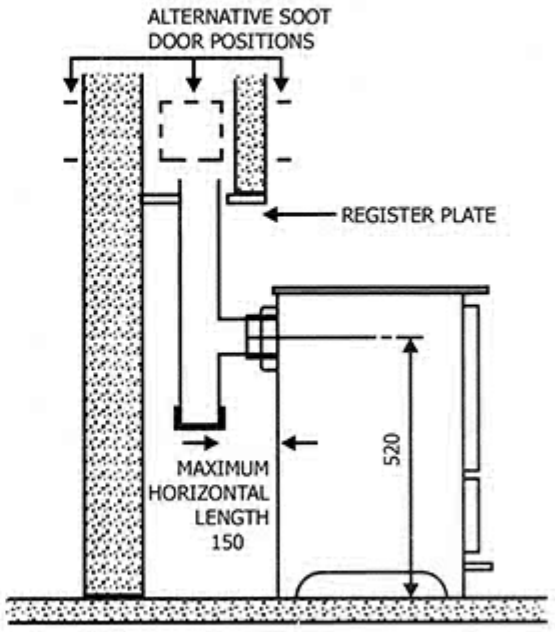

FOR YOUR INFORMATION- DUNSLEY ALSO MANUFACTURE

Real Flame Solid Fuel open Fires with High output boilers.

Dunsley Yorkshire stove. H.M. Government clean air act approval Smokless stove.

Dunsley/Baker Neutralizer to link two boilers into one central heating system.

Oxypic inhibitor and leak sealer.
Guards against scaling, rusting, oxide sludge and leaks.

Please phone for advice or literature.

N.B. DRAWINGS NOT TO SCALE

HIGHLANDER 10
WITH ATTACHED LOG STORE

STOVE FRONT VIEW

FIG.4

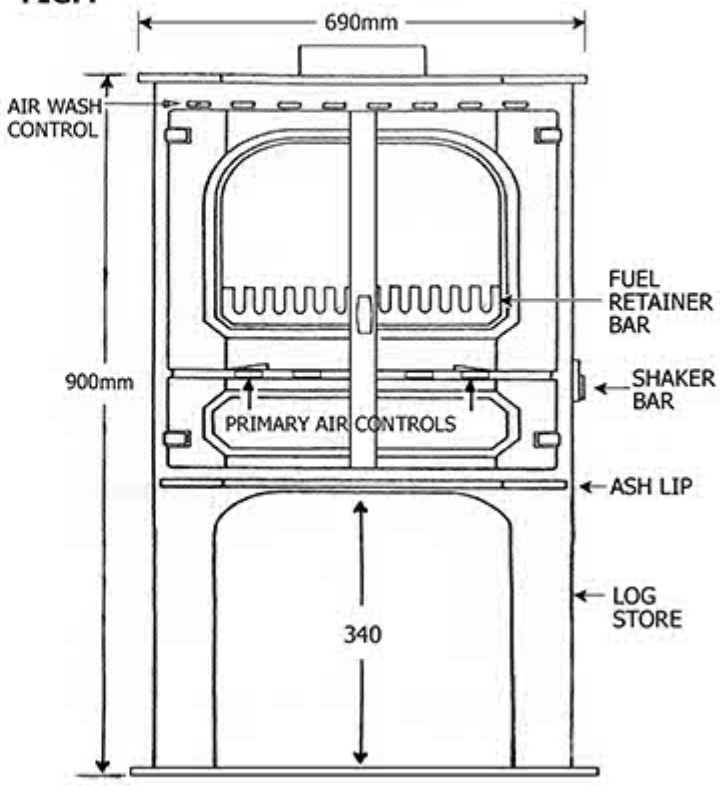

MEASUREMENT BACK TO FRONT INCLUDING ASHLIP 385MM

GROSS WEIGHT - 155kg

Levelling adjusting bolts are fitted in each four corners of the log stove base and are adjusted by thread action with the bolt heads facing down to give a firm base and assist in levelling the stove.

One 8.5mm hole is provided in each of the four corners of the base to fix the stove to the hearth.

If it is required to convert to a rear flue outlet please see page 9.

A Canopy can be fitted to the log stove if required, see page 8. Please note this would increase the overall height of the stove by 150mm.

WHY CHOOSE A HIGHLANDER-10 WITH ATTACHED LOG STORE?

It gives you somewhere to put the logs ready to re-fuel the stove. It makes it easier to reach all the controls and remove the ash, which also makes it easier to use for the older and infirm.

ALL MEASUREMENTS IN MM UNLESS OTHERWISE STATED N.B. DRAWINGS NOT TO SCALE

Manufacturers for over 60 years of Domestic Heating Appliances
Specialists in Solid Fuel Open Fire Central Heating Boilers,
and Multi Fuel Stoves.

Dunsley Heat Limited
Bridge Mills, Huddersfield Road, Holmfirth, West Yorkshire HD9 3TW
Tel: (01484) 682635 Fax: (01484) 688428 email: sales@dunsleyheat.co.uk
Web Sites: www.dunsleyheat.co.uk

QUALITY COUNTS

Dunsley operate a policy of constant development. Details can vary as development continues from those given in this publication.

LEAVE THESE INSTRUCTIONS ADJACENT TO THE INSTALLED AND TESTED APPLIANCE

REF HIGH10 DB012 08-08-13

THE DUNSLEY-HIGHLANDER 10 MULTI-FUEL STOVE

SOLO DOOR HANDLE SUPPLEMENT

The installation & operating instructions with this stove are correct.
Apart from the following instructions regarding the door handle; When opening and closing the door use the gaunlets gloves provided for the door handle.
DO NOT use operating tool, as this will damage the handle finishes.
The new style solo handle is available in black, chrome, brass and must only be cleaned by a damp none abrasive cloth when the stove fire bed is cold.

Part No. for Highlander solo door

1. Handle 02370
2. Glass 02371
3. Sealing rope 02372
4. Glass fibre seals 02373
5. Solo door complete 02374
6. Fuel Retaining Bar 02378

Congratulations on buying your new heating appliance!

We would like to offer some sound advice to help ensure your complete satisfaction.

First of all, get your **appliance installed** by someone competent e.g. a HETAS registered engineer, who will have been trained to do the job. These engineers can be found on the HETAS website www.hetas.co.uk or by 'phoning the Solid Fuel Association on 0845 601 4406.

When deciding what to burn, be aware whether you are in a Smoke Control Area, and what the manufacturer recommends. If you have any doubts as to what **fuels to burn**, seek advice from the Solid Fuel Association on 0845 601 4406 or online at www.solidfuel.co.uk. Wood fuel products should not be burned in Smoke Control Areas unless the appliance has been specifically exempted by DEFRA. Logs should be well-seasoned and dry.

Then, be sure to **buy your coal and smokeless fuel** from an Approved Coal Merchant. If you have a fuel bunker, 'open sack' deliveries will be the most economic way of buying fuel, though fuel in sealed plastic bags will be more convenient if you have no bunker.
Any delivery over 110kg should be accompanied by a Delivery Ticket/Invoice detailing the type of fuel, the weight per bag/sack and total net weight etc.
To find an Approved Coal merchant, use Yellow Pages or contact the Solid Fuel Association either on 0845 601 4406 or online at www.solidfuel.co.uk.

Do not forget to have your **chimney swept** at least once per year (even for smokeless fuels) and if you burn wood or housecoal, at least twice a year. It is advisable to use a registered Sweep who will leave a certificate to say he has cleaned the chimney. To find a Sweep, use Yellow pages or contact the Solid Fuel Association.

Particularly for stoves, roomheaters, cookers and boilers it is highly recommended to have the **appliance serviced** once a year, and again the Solid Fuel Association can help with finding a Maintenance Engineer if your supplier cannot recommend anyone.

Generally, be sure that ash is not allowed to build up in the ashpan under the grate because if the ash touches the bottom of the grate it will lead to early failure of the grate bars. If your appliance has a throat plate (baffle), be sure to check once a month that it is clear. Any flueways (on boiler models) need to be cleared weekly.

Some of the leaflets available from the Solid Fuel Association:

- How to Get the Best out of your Roomheater/Stove
- How to Get the Best out of your Open Fire
- How to Get the Best out of your Boiler
- Guide to Opening up your Fireplace
- Curing Chimney Problems
- Carbon Monoxide Awareness
- Solid Fuel Safety Guide
- Complete Guide to Solid Fuel Heating

Solid Fuel Association 7 Swanwick Court Alfreton Derbyshire DE55 7AS

CE Declaration of Conformity certificate

Manufacturer:
Dunsley Heat Ltd, Bridge mills, Holmfirth, England HD9 3TW

Product Name:
Highlander 10 Multifuel Stove

Declared Performance - test date 18/01/2012

Ancit:

Parameter		Mean
Test duration	h	1.0
Total Efficiency	%	77.6
Nominal heat output	kW	9.8
Mean CO emission (at 13% O_2)	%	0.37
Mean flue gas temperature	°C	325
Flue mass gas flow	g/s	5.9

Wood:

Parameter		Mean
Test duration	h	1.0
Total Efficiency	%	74.6
Nominal heat output	kW	10.0
Mean CO emission (at 13% O_2)	%	0.35
Mean flue gas temperature	°C	368
Flue mass gas flow	g/s	7.1

Temperature safety test

Distance from combustibles Rear 1000 mm
Side 575 mm

Intended use: Heating of Domestic Housing

Tested to BSEN 13240 : 2001 + Amd 2 : 2004
Notified testing laboratory gastec at CRE
I declare that this information is true

Signature: ..... R & D Director

To be completed by installer

Istallation address .....

Installed by .....

Has a flexible flue liner been fitted .....

Has a flue draught been taken when stove was lit: YES / NO Pressure taken: .....

This document forms part of the hearth notice. Installed and lit to demonstrate to the house holder that it has been fitted to the current building regs Doc J 2010.

Signed ..... Date .....